5V*0.5A low voltage drop diode chip CH213

Datasheet

Version: V1.1

https://wch-ic.com

1. Overview

CH213 is a low dropout ideal diode chip with current limiting function. The chip has integrated modules for over-current protection, short-circuit protection, over-temperature protection, power supply polarity protection, etc. It supports DC applications with no more than 1A current at 5V, and can protect the power supply system by limiting the output current when an over-current condition such as a short-circuit occurs at the VO output, and can protect the load circuit at the VO output when the input power supply polarity is wrong.

The CH213 is equivalent to a Schottky Barrier Diode plus a self-recovery fuse, but with a substantially lower on-voltage drop and more rapid over-current protection.

The following is the internal block diagram of CH213 for reference only.

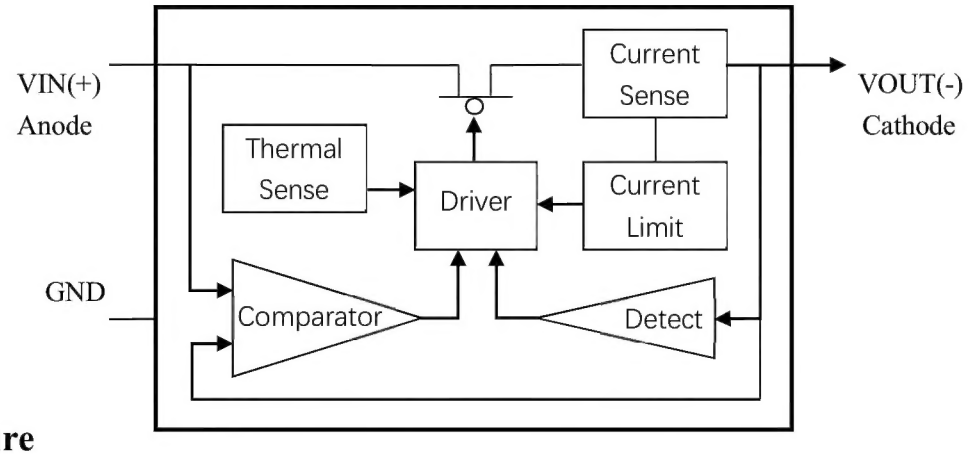

2. Feature

- Built-in power switching tube, typical 160mΩ on-resistance.
- Low turn-on voltage and low dropout single conductor, typical voltage drop of 32mV at 200mA current.
- Support maximum on-current of about 1A at 5V and current limit of about 1.3A.
- Support power supply voltage 2.2V~5.5V.
- Typical 20uS fast current limit protection in case of output over-current or output short-circuit.
- Diode chip shutdown to protect the load circuit at the output in case of input power polarity error.
- Low-power consumption, typical 4uA quiescent operating current.
- No reverse conduction current in diode chip off state.
- Available in SOT23-3, SOT23-6, and DFN6 packages.

3. Package

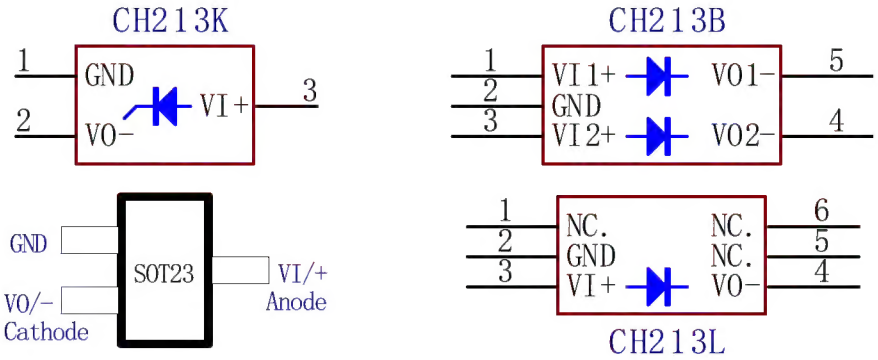

Note: Pin 0# refers to the EPAD of the DFN package.

Package form	Shaping width		Pin spacing		Package description	Order model
SOT23-3	1.6mm	63mil	1.9mm	75mil	Small Outline Transistor	CH213K
SOT23-6	1.6mm	63mil	0.95mm	37mil	Small Outline Transistor	CH213B
DFN6	2*2mm		0.65mm	25.6mil	Quad Flat No-Lead Package	CH213L

Note: CH213B contains two independent sets of ideal diodes, equivalent to two CH213Ks that share GND.

4. Pin

CH213K Pin No.	CH213B Pin No.	CH213L Pin No.	Pin Name	Type	Pin Description
3	1,3	3	VIN,+	Power supply	Diode anode, power input, connected to the positive voltage side of the power supply
2	5,4	4	VOUT,-	Power supply	Diode cathode, power output, connected load, external capacitor recommended
1	2	2	GND	Power supply	Common ground terminal, connected to the negative voltage side of the power supply

5. Functional Module

5.1 Input Power Polarity Protection

In normal operation, VI is the positive polarity of the power supply and GND is the common terminal or the negative polarity of the power supply; there is no reverse diode between VI and GND inside the CH213 chip, so when VI is accidentally connected to the negative polarity of the power supply, there is only a few mA leakage current when the polarity of the power supply is wrong, and the CH213 chip itself does not generate large currents, and the switching tubes are off to protect the load circuit at the VO output. The CH213 chip itself does not generate large currents and the switch is turned off to protect the load circuit at the VO output.

5.2 Over-temperature Protection

When the ideal diode CH213 continuous conduction current is high or when overcurrent or short circuit occurs, the power consumption of the voltage difference between VI and VO multiplied by the current will cause the chip internal temperature to rise. When the chip temperature exceeds the over-temperature protection threshold Tsd, the switch will be forcibly shut down and VO will have no output current. Later, after the chip cools down, the switch will be allowed to turn on again. If the chip is over-temperature after a period of time, it will be turned off again.

5.3 Low Turn-on Voltage Single Weld

VI is equivalent to the anode of the low dropout diode. When the VI voltage is higher than the VO voltage, the switching tube of the ideal diode CH213 turns on.

When VI voltage is lower than VO voltage, CH213 gets the quiescent operating current from VO terminal and turns off the switching tube, there is no reverse ON current and no current is consumed at VI terminal, which is equivalent to reverse cutoff of the diode.

To improve the characteristics of the CH213 internal circuit at light load, it is recommended to place capacitors at the VO output, which can be combined with capacitors of the load circuit.

5.4 Current Limiting and Over-current/Short-circuit Protection

When the VO output current Iout exceeds the current limiting threshold Imax, the overcurrent protection module automatically reduces the power switching tube conduction degree, which increases the conduction resistance and decreases the VO voltage, thus limiting the output current and entering the state of near constant current. The constant current value is positively related to the VO voltage value, the lower the VO voltage, the smaller the constant current value.

When the VO is shorted to GND, or the VO voltage is lower than the short-circuit voltage Vshort, the constant current value is the smallest, that is, the short circuit current Ishort.

6. Parameters

6.1 Absolute Maximum Value (critical or exceeding the absolute maximum value will probably cause the chip to work improperly or even be damaged)

Name	Parameter Description	Min.	Max.	Unit
TA	Ambient temperature at work	-40	85	℃
TS	Ambient temperature during storage	-55	150	℃
VI	Supply voltage of VI pin to GND pin	-6.5	6.5	V
VO	Supply voltage of VO pin to GND pin	-0.5	6.5	V
VDIFF	Voltage difference between VI pin and VO pin (VI-VO)	-6.5	6.5	V
VESD	HBM mannequin ESD tolerant voltage	2		V
PD	Maximum power consumption of the whole chip		400	mW
θ_{JAS}	SOT23, SOT23-6L package thermal resistance	220		℃/W
θ_{JAQ}	DFN6_2x2 package thermal resistance	140		℃/W

6.2 5V Electrical Parameters (Test conditions: TA=25℃, VI/VO=5V)

Name	Parameter Description		Min.	Typ.	Max.	Unit
VI,VO	Supply voltage (take the higher voltage among VI or VO)		2.2	5.0	5.5	V
Iq	Quiet operating current at turn-on			3.6	10	uA
Isdo	Operating current at the VO side at shutdown			2.7	10	uA
Isdi	Operating current at the VI side at shutdown			0	1	uA
Ioff	Reverse conduction current from VO to VI at shutdown			0	3	uA
Vsw	Ideal differential pressure threshold for diode opening (VI-VO)			14		mV
Ron	Power switching tube on-resistance	Iout=500mA	120	160	240	mΩ
Iout	Ideal diode on-current range		0	500	900	mA
Imax	Current limit threshold, overcurrent protection current threshold		1.05	1.3	1.6	A
Vshort	VO short-circuit protection voltage threshold		0.8	0.95	1.1	V
Ishort	VO short-circuit current to ground after short-circuit protection		180	250	330	mA
Vdrmin	Ideal diode conduction minimum voltage drop	Iout=0.1mA	2	15	30	mV
Vdr100	Voltage drop when the ideal diode is on	Iout=100mA	6	20	40	mV
Vdr200		Iout=200mA	16	32	57	mV
Vdr300		Iout=300mA	28	48	80	mV
Vdr500		Iout=500mA	52	80	130	mV
Vdr1k		Iout=1000mA	120	160	240	mV
Tsd	Over-temperature protection	Rising stage		130		℃

	threshold (with hysteresis characteristics)	Falling stage		100		℃
Ton	Main guide opening time	Cload=1uF		600	1200	uS
Tshort	Overcurrent or short circuit protection response time	Cload=1uF		10	60	uS
Rload	Resistive load range at the VO output		5			Ω
Cload	Capacitive load range at the VO output		0.0001	0.1~10	500	uF

6.2 3V Electrical Parameters (Test conditions: TA=25℃, VI/VO=3V)

Name	Parameter Description		Min.	Typ.	Max.	Unit
VI,VO	Supply voltage (take the higher voltage among VI or VO)		2.2	3.0	5.5	V
Iq	Quiet operating current at turn-on			3.2	10	uA
Isdo	Operating current at the VO side at shutdown			2.4	10	uA
Isdi	Operating current at the VI side at shutdown			0	1	uA
Ioff	Reverse conduction current from VO to VI at shutdown			0	2	uA
Vsw	Ideal differential pressure threshold for diode opening (VI-VO)			14		mV
Ron	Power switching tube on-resistance	Iout=300mA	170	230	340	mΩ
Iout	Ideal diode on-current range		0	300	800	mA
Imax	Current limit threshold, overcurrent protection current threshold		0.85	1.15	1.45	A
Vshort	VO short-circuit protection voltage threshold		0.7	0.8	1.0	V
Ishort	VO short-circuit current to ground after short-circuit protection		120	180	250	mA
Vdrmin	Ideal diode conduction minimum voltage drop	Iout=0.1mA	2	15	32	mV
Vdr100	Voltage drop when the ideal diode is on	Iout=100mA	10	24	48	mV
Vdr200		Iout=200mA	26	46	78	mV
Vdr300		Iout=300mA	45	69	110	mV
Vdr500		Iout=500mA	75	115	180	mV
Vdr800		Iout=800mA	135	184	280	mV
Tsd	Over-temperature protection threshold (with hysteresis characteristics)	Rising stage		135		℃
		Falling stage		105		℃
Ton	Main guide opening time	Cload=1uF		350	700	uS
Tshort	Overcurrent or short circuit protection response time	Cload=1uF		10	60	uS
Rload	Resistive load range at the VO output		6			Ω
Cload	Capacitive load range at the VO output		0.0001	0.1~10	500	uF

7. Typical Characteristics Diagram (TA=25℃ unless otherwise specified)

7.1 On-current and Dropout Voltage at 5V (test conditions: VI=5V)

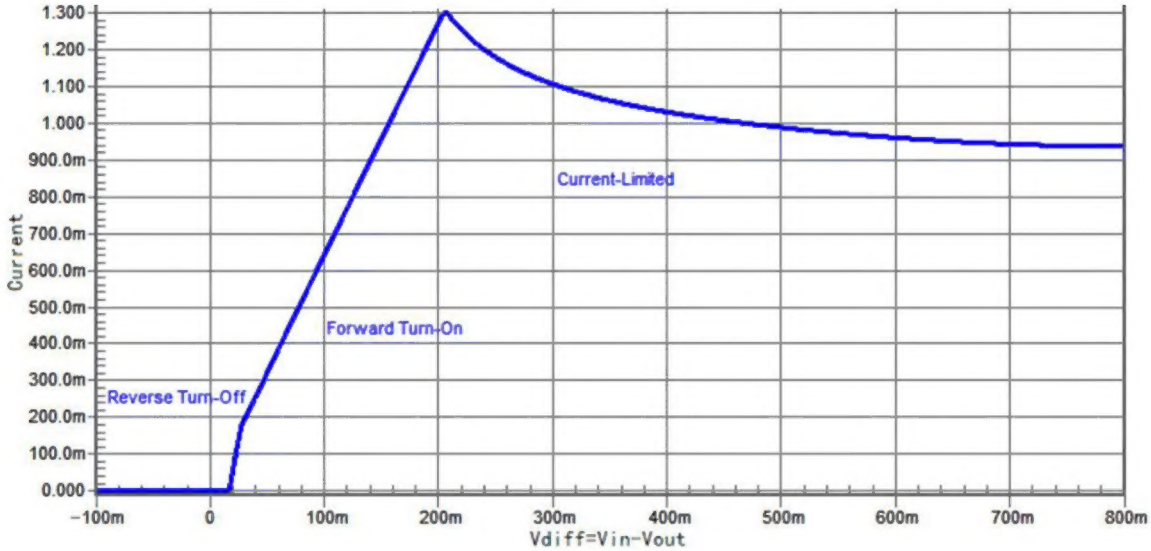

7.2 On-current and Dropout Voltage at 3V (test conditions: VI=3V)

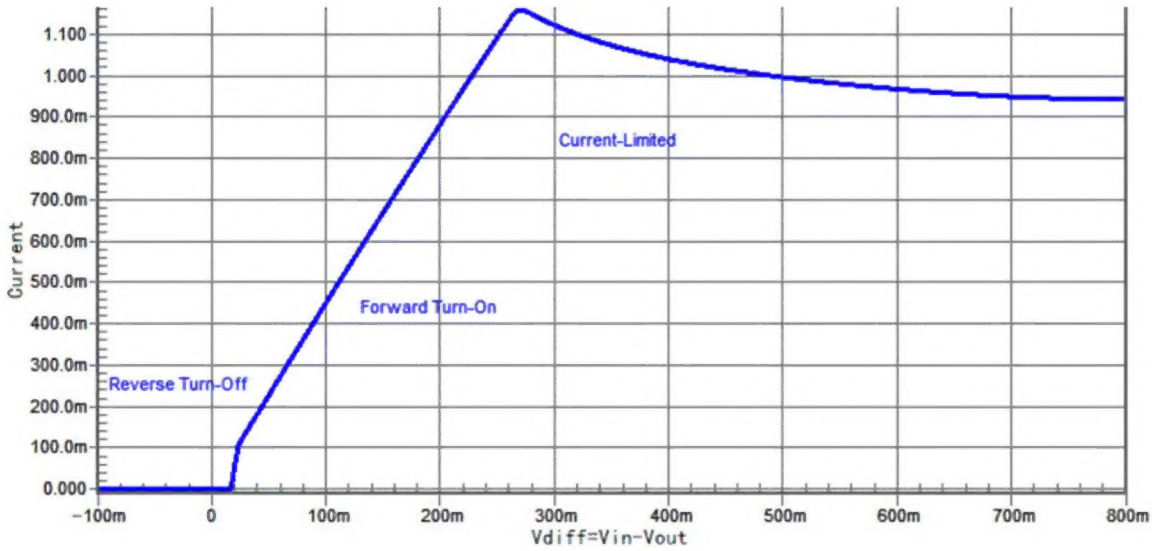

7.3 Power-up Process with Load at 5V (test conditions: VI=5V, VO resistive load=10Ω, VO capacitive load=100uF)

The following figure shows the relationship between the output current Iout, output voltage Vout and time for the 5V voltage on the VI side. Cload exists a charging process after power on, so it goes through three stages of short-circuit protection current limit, over-current protection current limit and normal positive conduction after power on, and the time duration mainly depends on the load capacitor Cload size.

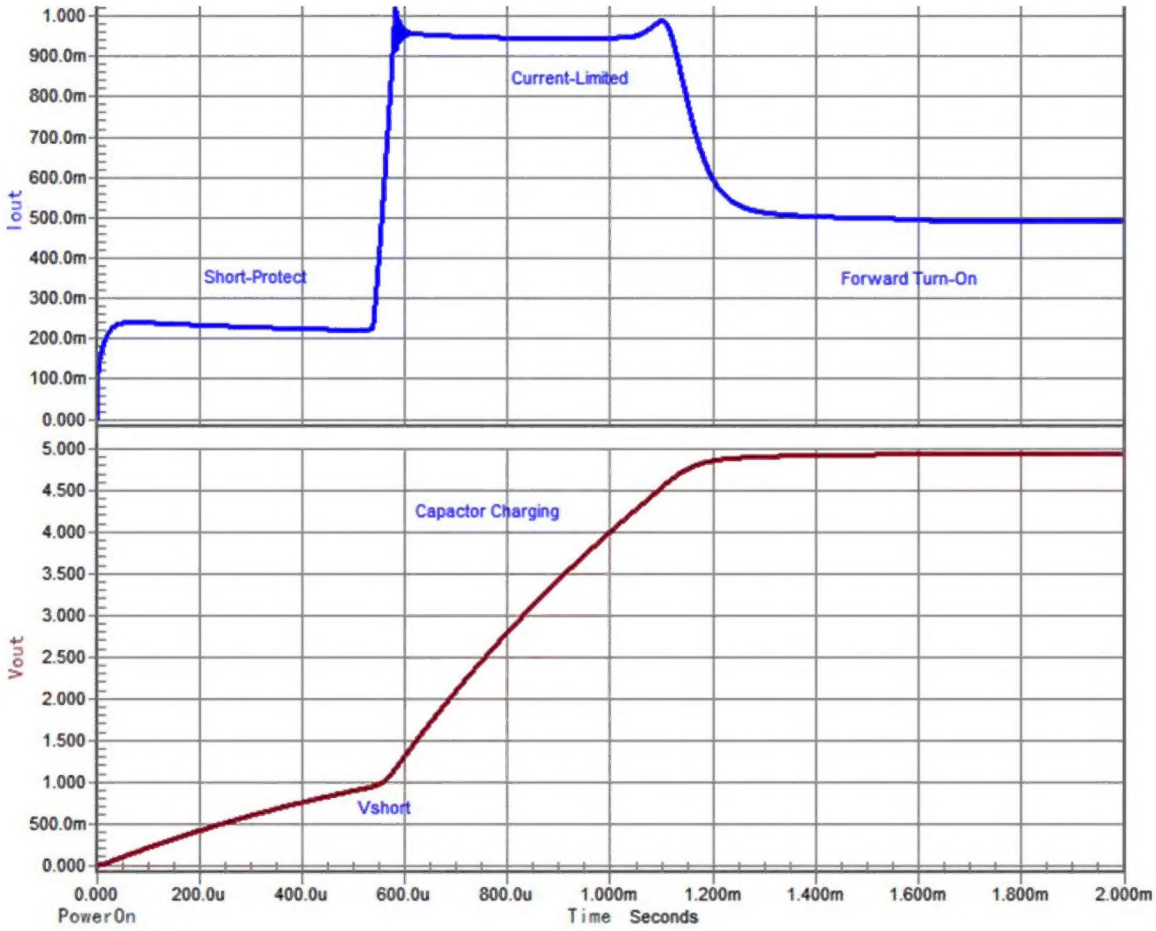
Iout
1.000
900.0m
800.0m
700.0m
600.0m
500.0m
400.0m
300.0m
200.0m
100.0m
0.000
Current-Limited
Short-Protect
Forward Turn-On
Vout
5.000
4.500
4.000
3.500
3.000
2.500
2.000
1.500
1.000
500.0m
0.000
Capactor Charging
Vshort
0.000
Power On
200.0u
400.0u
600.0u
800.0u
1.000m
1.200m
1.400m
1.600m
1.800m
2.000m
Time Seconds

8. Application

As a low turn-on voltage and low on-state voltage drop diode chip, CH213 can be used in place of ordinary diodes in applications up to 500mA at 3V or 5V DC, providing power supply polarity protection against external power reversal, over-current and short-circuit protection and over-temperature protection, and achieving a low on-state voltage drop to reduce losses.

8.1 Low Voltage Drop Diode Unidirectional Power Supply

U1 below is used to avoid backflow current from external power supply of P6 in HUB to VBUS of USB port P5. C3 has optional capacity from 1uF to 10uF and C4 has optional capacity from 10uF to 470uF, if C4 capacity is too large, then USB bus +5V will take longer time to charge to C4.

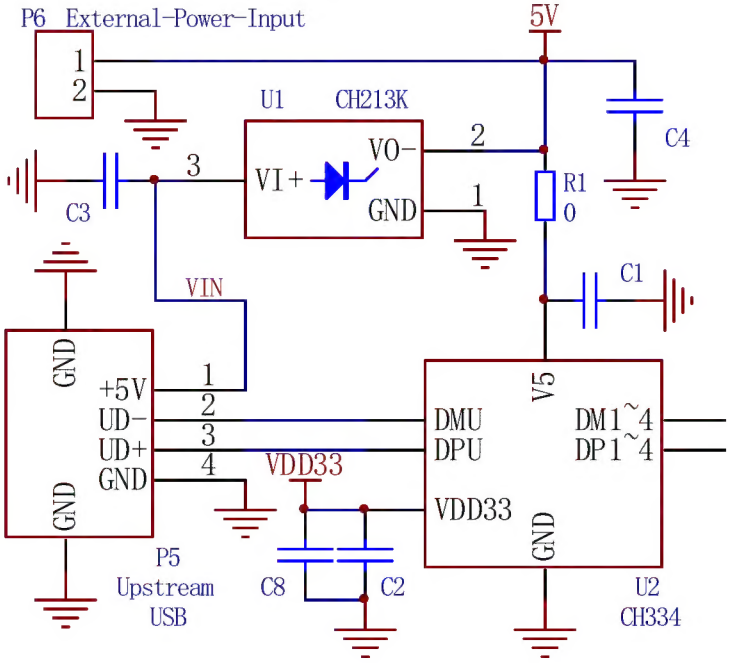

8.2 Dual Power Supply Selection for High Voltage

U1 below is used to automatically select the higher voltage between the battery supply and the external supply, and to provide protection against the polarity of the external supply; C3 is optional for high internal resistance batteries, and C4 is optional for the higher operating current of U2 and the lower capacity of C1.

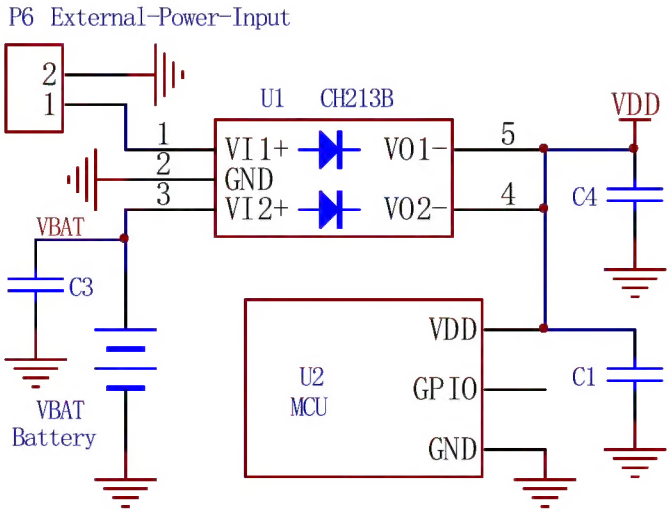

8.3 Anti External Power Supply Polarity Reverse Connection

U1 below is used to protect U2 in the event of an external power supply polarity error. Under normal circumstances, pin 1 of P6 in the figure is positive and pin 2 is common or negative, and U1 will shut down to protect U2 when unexpected operation causes the polarity of the P6 input power supply to be reversed.

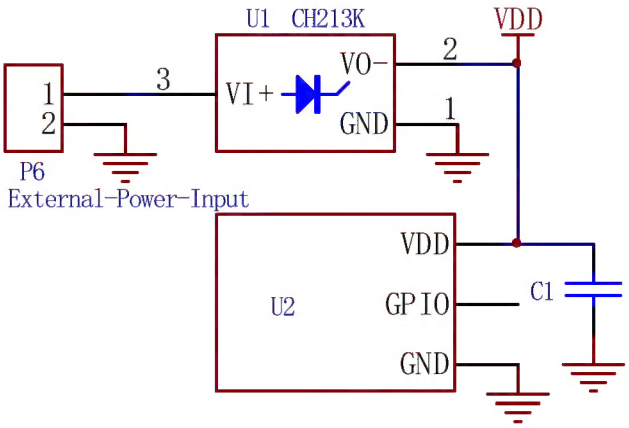

8.4 Comparison with Schottky Barrier Diode + Fuse

The CH213 is equivalent to a Schottky Barrier Diode with a self-resetting fuse, but with a lower on-state voltage drop and faster overcurrent protection. The following table is a comparison of the voltage drops of several unidirectional power supply solutions when applied to different load currents at 5V at room temperature.

Unidirectional power supply solution	10mA load	50mA load	200mA load	500mA load	1A load
CH213	16mV	18mV	32mV	80mV	160mV
3A Schottky Barrier Diode + 1A fuse resistor	220mV	255mV	320mV	400mV	500mV
Schottky Barrier Diode only (no over-current protection)	220mV	250mV	300mV	340mV	370mV

Note: The 1A self-recovery resistor has an internal resistance of about 100mΩ, and the response time for overcurrent protection is about a few mS to a few hundred mS.

The 3A Schottky Barrier Diode is chosen because of its relatively low voltage drop, but if replaced by a 1A Schottky Barrier Diode, the voltage drop is even greater.

9. Package Information

9.1 SOT23-3

Symbols	Metric in mm		
	Min.	Typ.	Max.
A	1.05	1.15	1.35
A1	0.0	0.07	0.15
b	0.3	0.4	0.51
c	0.1	0.16	0.22
D	2.7	2.9	3.1
E	1.4	1.6	1.8
E1	2.6	2.8	3.0
e		0.95	
L		0.6	
L1	0.25	0.4	0.55
θ	0°		8°

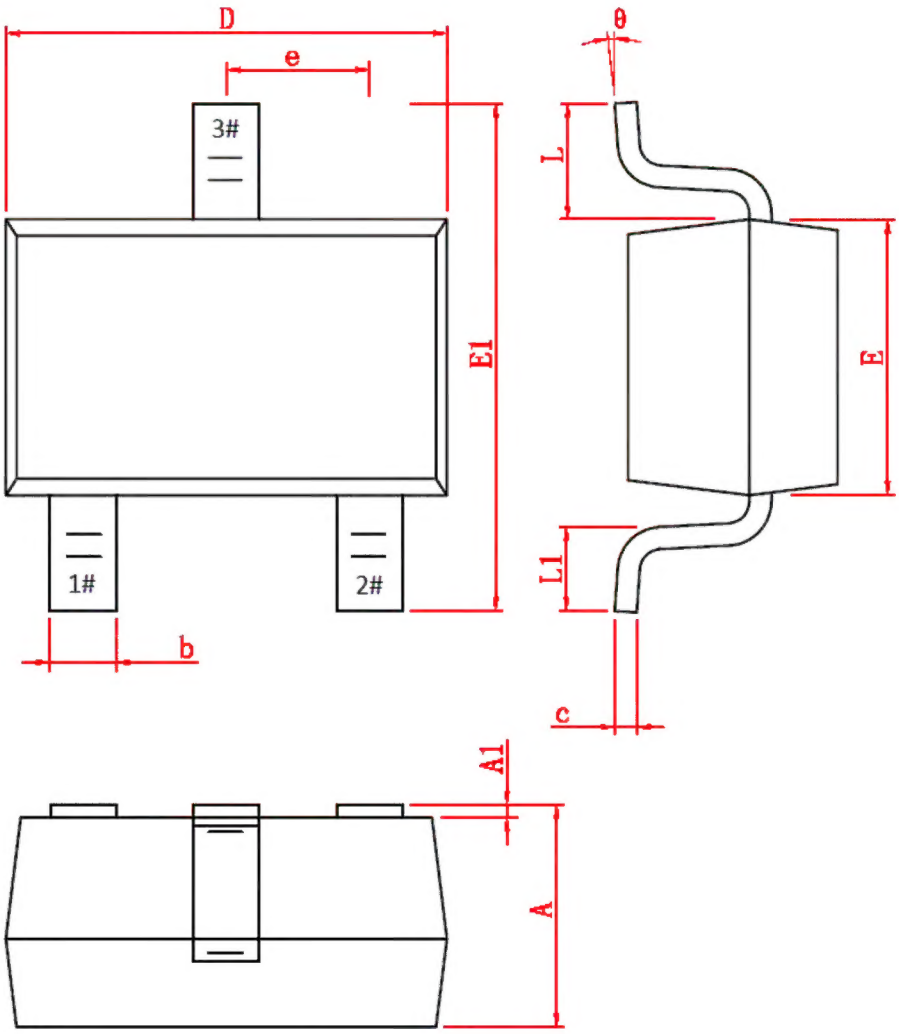

CH213K is printed as 3Kxy, where xy is the lot code.

9.2 SOT23-6

Symbols	Metric in mm		
	Min.	Type	Max.
A	1.05	1.15	1.35
A1	0.0	0.07	0.15
b	0.3	0.4	0.51
c	0.1	0.16	0.22
D	2.7	2.9	3.1
E	1.4	1.6	1.8
E1	2.6	2.8	3.0
e		0.95	
L		0.6	
L1	0.25	0.4	0.55
θ	0°		8°

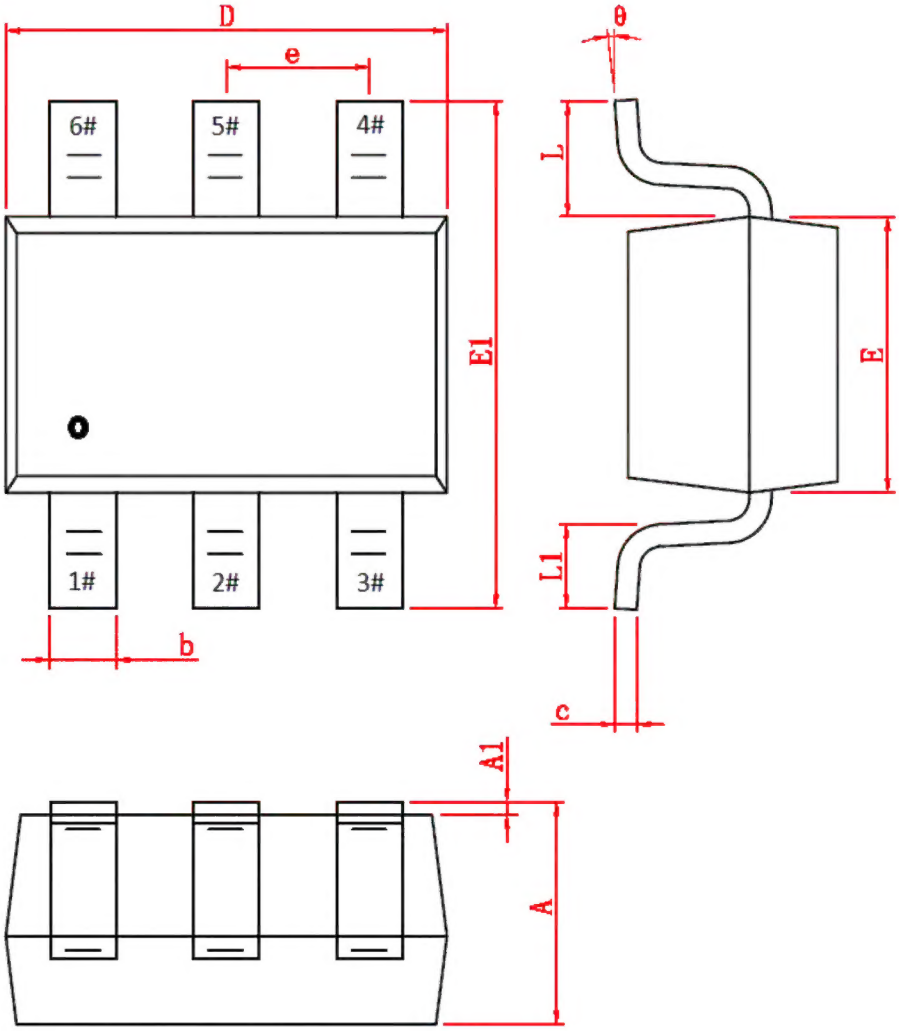

CH213B is printed with 3Bxy, where xy is the lot code.

9.3 DFN6_2×2

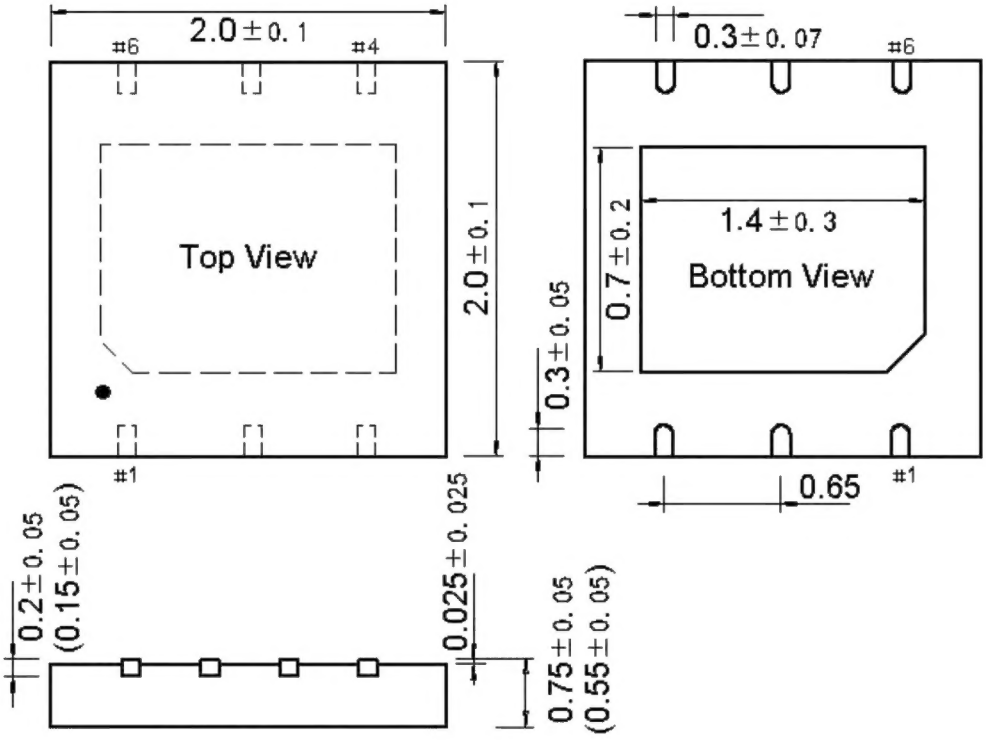

CH213B is printed with

, where xyz is the lot code.

Pin1#